/Group 4 Ordering Code Rules

B	H	P	4	Q0	D	33.1	S0	F1	/omit	/omit	/omit
Boden	Material	Function	Group	Front cover	Rotation	Displacement	Shaft	Ports	Special structure	Options	Other

H	Front and end cover material cast iron,

P	Pump

4	Group 4

D	Clockwise
S	Counter clockwise
R	Reversible

33.1
49.7
66.3
82.8
99.4
116
132.5
149.1
165.7
182.2
198.8

special designing

Options	
	Omit–Range between −10℃ and +80℃,inlet pressure up to max. 3 bar absolute.
V	Version suitable for fluid at hi–temperatures, range between −10℃ and +120℃.
H	Version suitable for fluid at low–temperatures, range between −40℃ and +80℃.
N	Version suitable for inlet pressure up to max. 3 and 10 bar absolute.
For other special options, please contact our engineers.	

Front cover

Q0

Square front cover
(centering ϕ127mm)

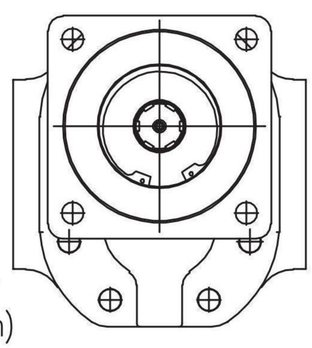

Shaft

C0

straight keyed ϕ31.75

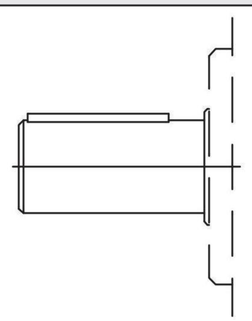

S0

SAE spline shaft
DP12/24–30°–14T

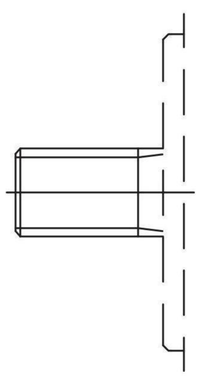

Ports

F_

Split flange

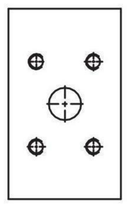

N_

NPT thread